PRIV. DE RIO SANTIAGO #30
COL. LA RAZA
SOLEDAD DE GRACIANO SANCHEZ
SAN LUIS POTOSI, C.P. 78433

"N" SERIES COMMERCIAL STEEL DOOR w/ SIDELITE

INSWING / OUTSWING "NON-IMPACT"

L F Schmidt

L. F. SCHMIDT LICENSE No. 43409 STATE OF FLORIDA PROFESSIONAL ENGINEER

Digitally signed by Lyndon F Schmidt
Date: 2026.07.01 14:48:09 -04'00'

This item has been digitally signed and sealed by **L. F. Schmidt, P.E.** on the date adjacent to the seal.

Printed copies of this document are not considered signed and sealed and the signature must be verified on any electronic copies.

THIS PRODUCT APPROVAL IS VALID ONLY FOR THE STATE OF FLORIDA

GENERAL NOTES

1. This product has been evaluated and is in compliance with the 9th Edition (2026) Florida Building Code (FBC) excluding the "High Velocity Hurricane Zone" (HVHZ).

2. Product anchors shall be as listed and spaced as shown on details. Anchor embedment to base material shall be beyond wall dressing or stucco.

3. When used in areas requiring wind borne debris protection, this product is required to be protected with an impact resistant covering that complies with Section 1609.1.2 of the FBC and Section 1609.1.2.2 of the FBC.

4. For 2x stud framing construction, anchoring of these units shall be the same as that shown for 2x buck masonry construction.

5. Site conditions that deviate from the details of this drawing require further engineering analysis by a licensed engineer or registered architect.

TABLE OF CONTENTS

SHEET #	DESCRIPTION
1	Typical elevations, design pressures, & general notes
2	Door panel sections 161 lock prep
3	Horizontal cross sections
4	Vertical cross sections
5	Vertical cross sections
6	Vertical cross sections
7	Anchoring details
8	Glazing detail & components
9	Bill of materials & components

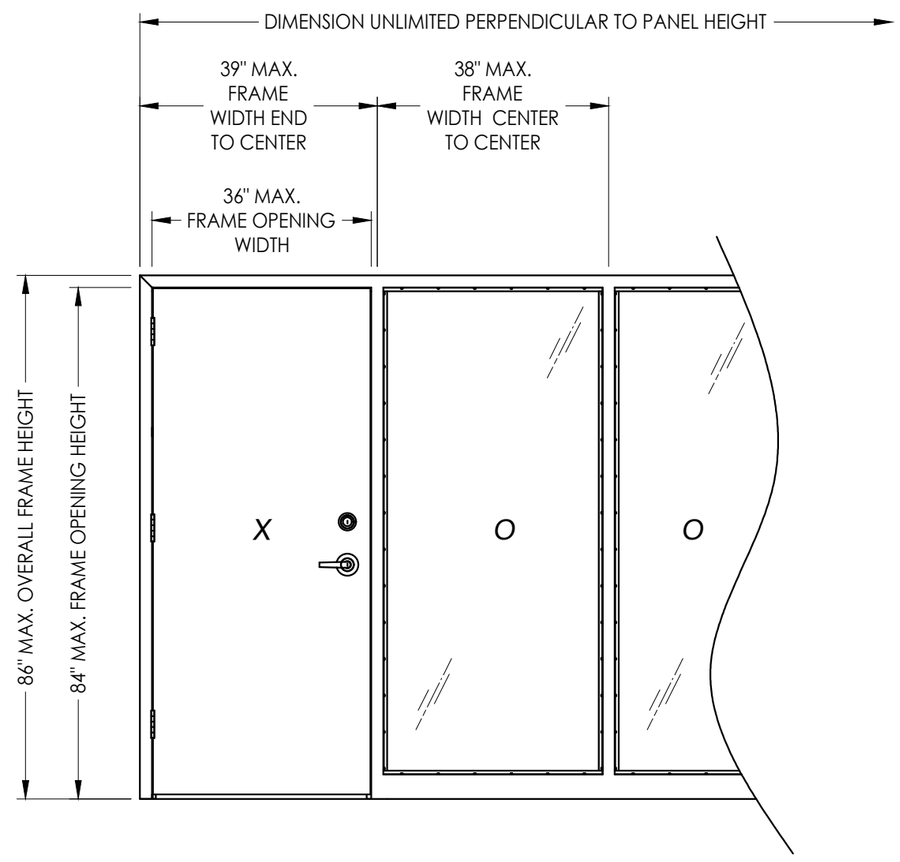

OVERALL FRAME DIMENSION	SIDELITE D.L.O. DIMENSION	LOCK TYPE	GLASS TYPE	DESIGN PRESSURE (PSF)	
				POSITIVE	NEGATIVE
39.0" x 86.0"	34.75" x 78.75"	161 LATCH (SCHLAGE)	G1	+55.0	-55.0
		161 LATCH & DEADBOLT (DESIGN HARDWARE)		+65.0	-65.0

Documents Prepared By:
Lyndon F. Schmidt
P.E. No. 43409
RW BUILDING CONSULTANTS, INC.
P.O. Box 230, Valrico, FL 33595
Phone No.: 813.659.9197
FBPE Registry No. 9813

PRODUCT: MMI "N" STEEL DOOR

PART OR ASSEMBLY: TYPICAL ELEVATIONS, DESIGN PRESSURES & GENERAL NOTES

REVISIONS

NO.	DATE		BY
5	7/01/26	UPDATE TO 9TH ED. (2026) FBC	LFS
4	7/11/23	UPDATE TO 8TH ED. (2023) FBC	LFS
3	7/30/20	UPDATE TO 7TH ED. (2020) FBC	DAC
2	7/18/17	UPDATE TO 6TH ED. (2017) FBC	LFS
1	10/14/16	UPDATE TO 5TH ED. (2014) FBC	JK

DATE: 11/3/08
SCALE: N.T.S.
DWG. BY: AL
CHK. BY: LFS
DRAWING NO.: FL-12186.2
SHEET 1 OF 9

© 2008 R.W. BUILDING CONSULTANTS INC.
G:\2023 FBC Drawings 1.26.26\Metal Mfg Industries\FL-12186 R4\12186.1-8.dwg

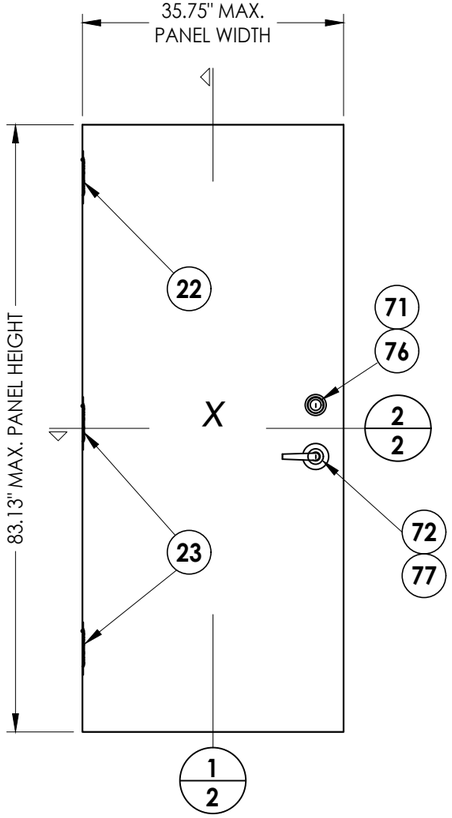

1 "N" OPAQUE STEEL DOOR PANEL

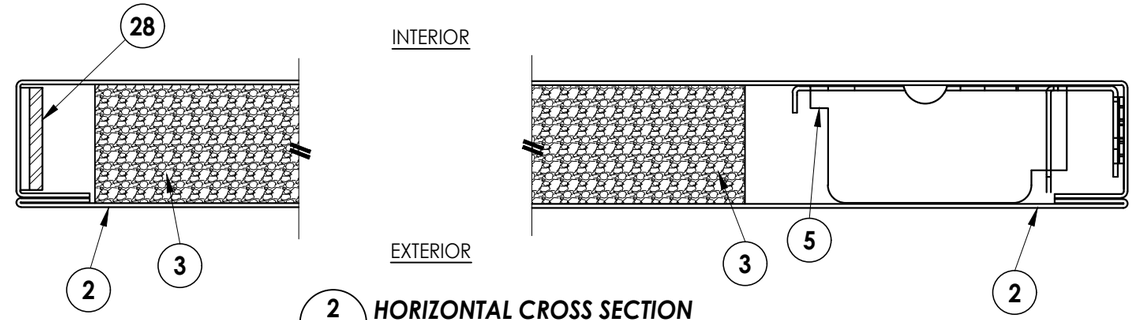

2/2 HORIZONTAL CROSS SECTION
Door panel

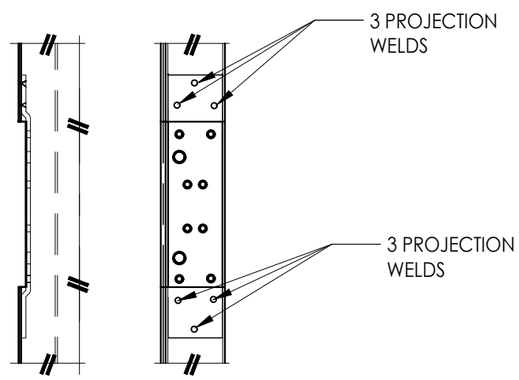

23 DOOR HINGE REINFORCEMENT

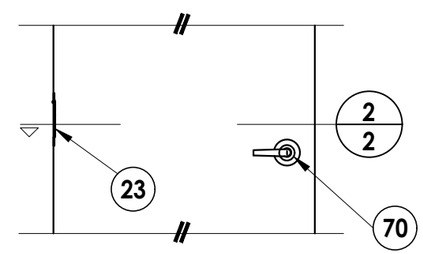

70 OPTIONAL LATCH ONLY

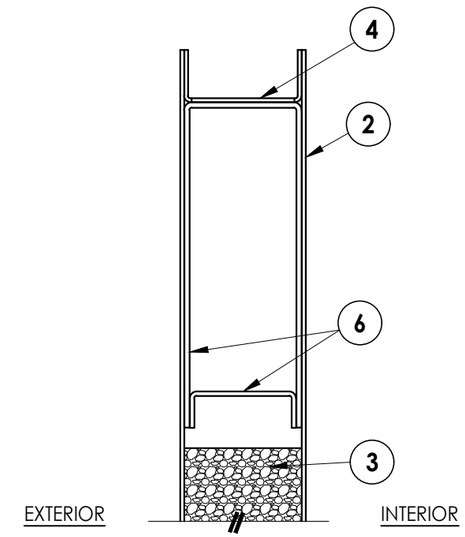

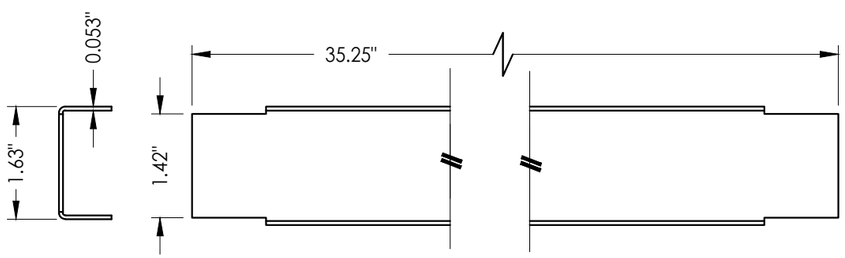

4 DOOR TOP & BOTTOM CLOSER

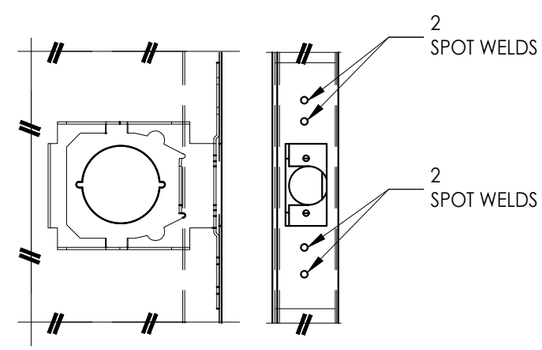

5 LOCK BOX REINFORCEMENT

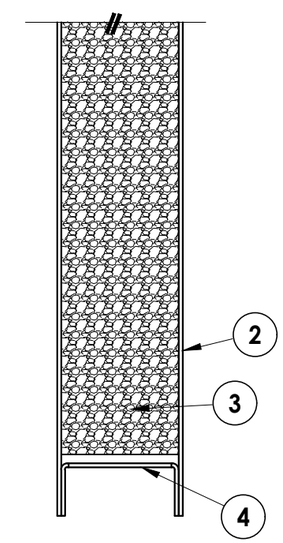

1/2 VERTICAL CROSS SECTION
Door panel

NOTE: ALL WELDING TO CONFORM w/ AMERICAN WELDING SOCIETY, ANSI/AWS AS PER FBC SECTION 2214.3.4.

Documents Prepared By:
Lyndon F. Schmidt
P.E. No. 43409

RW BUILDING CONSULTANTS, INC.
P.O. Box 230, Valrico, FL 33595
Phone No.: 813.659.9197
FBPE Registry No. 9813

PRODUCT: MMI "N" STEEL DOOR

PART OR ASSEMBLY: DOOR PANEL SECTIONS 161 LOCK PREP

NO.	DATE	REVISIONS	BY
5	7/01/26	UPDATE TO 9TH ED. (2026) FBC	LFS
4	7/11/23	UPDATE TO 8TH ED. (2023) FBC	LFS
3	7/30/20	UPDATE TO 7th ED. (2020) FBC	DAC
2	7/18/17	UPDATE TO 6TH ED. (2017) FBC	LFS
1	10/14/16	UPDATE TO 5TH ED. (2014) FBC	JK

DATE: 11/3/08
SCALE: N.T.S.
DWG. BY: AL
CHK. BY: LFS
DRAWING NO.: FL-12186.2
SHEET 2 OF 9

© 2008 R.W. Building Consultants Inc.

G:\2023 FBC Drawings 1.26.26\Metal Mfg Industries\FL-12186 R4\12186.1-8.dwg

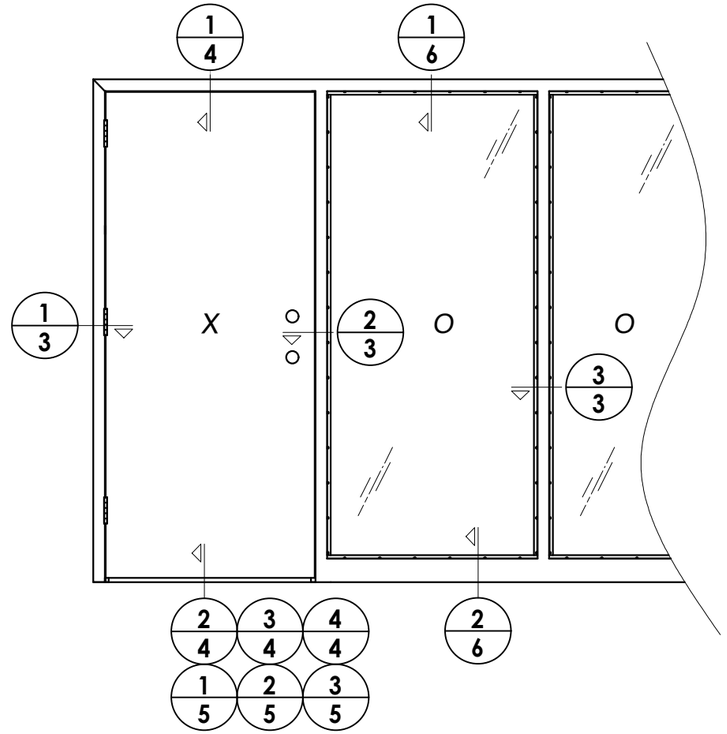

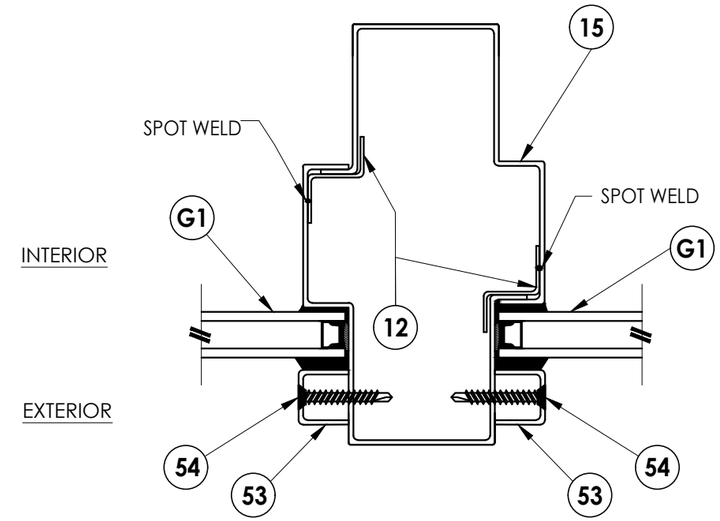

3/3 **HORIZONTAL CROSS SECTION**
Outswing shown
Inswing also approved

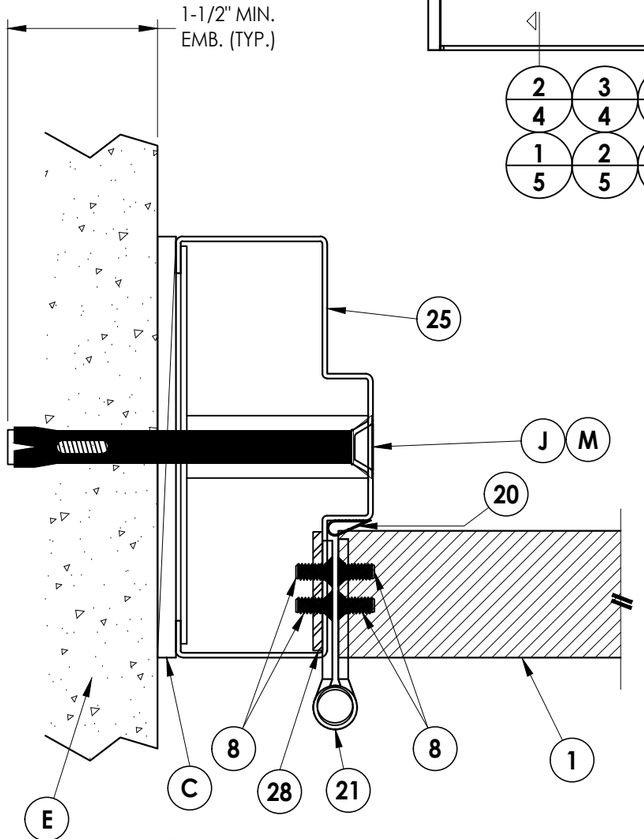

1/3 **HORIZONTAL CROSS SECTION**
Outswing shown
Inswing also approved

INTERIOR

EXTERIOR

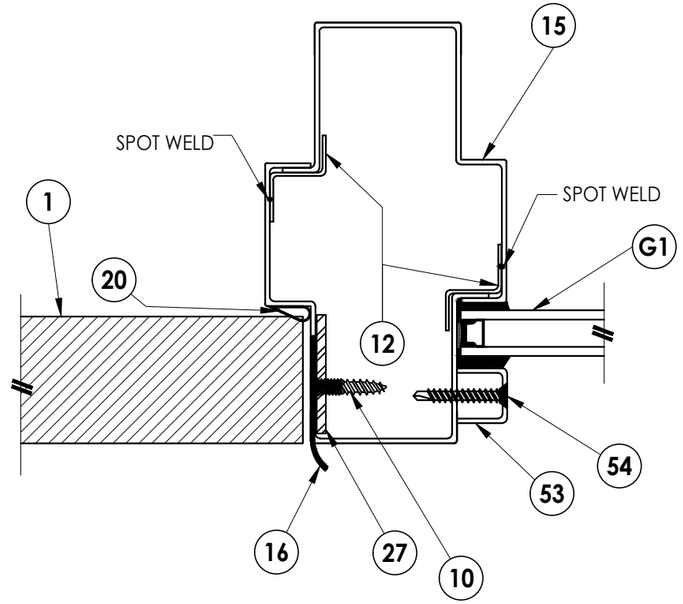

2/3 **HORIZONTAL CROSS SECTION**
Outswing shown
Inswing also approved

Documents Prepared By:
Lyndon F. Schmidt
P.E. No. 43409

RW BUILDING CONSULTANTS, INC.
P.O. Box 230, Valrico, FL 33595
Phone No.: 813.659.9197
FBPE Registry No. 9813

PRODUCT: MMI "N" STEEL DOOR

PART OR ASSEMBLY: HORIZONTAL CROSS SECTIONS

REVISIONS

NO.	DATE		BY
5	7/01/26	UPDATE TO 9TH ED. (2026) FBC	LFS
4	7/11/23	UPDATE TO 8TH ED. (2023) FBC	LFS
3	7/30/20	UPDATE TO 7TH ED. (2020) FBC	DAC
2	7/18/17	UPDATE TO 6TH ED. (2017) FBC	LFS
1	10/14/16	UPDATE TO 5TH ED. (2014) FBC	JK

DATE: 11/3/08
SCALE: N.T.S.
DWG. BY: AL
CHK. BY: LFS
DRAWING NO.: FL-12186.2
SHEET 3 OF 9

© 2008 R.W. BUILDING CONSULTANTS INC.

G:\2023 FBC Drawings 1.26.26\Metal Mfg Industries\FL-12186 R4\12186.1-8.dwg

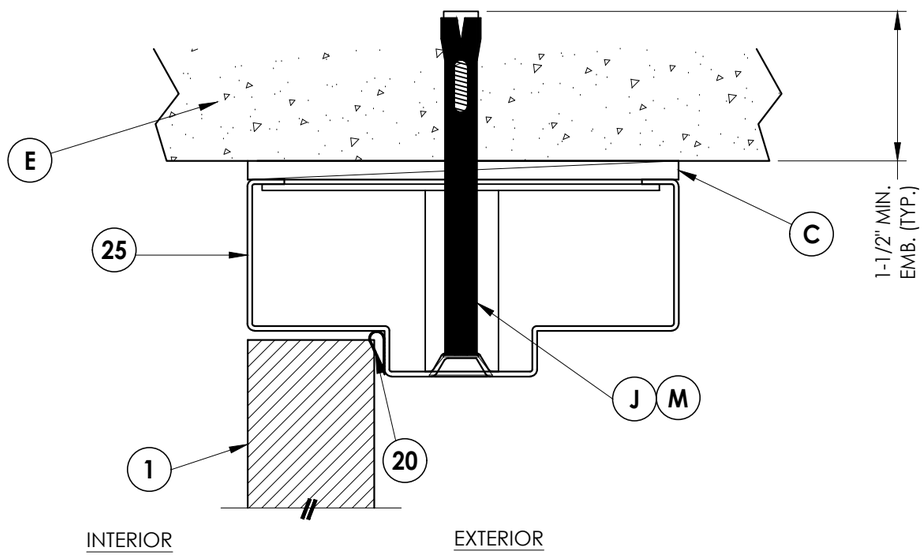

1/4 VERTICAL CROSS SECTION
Inswing configuration

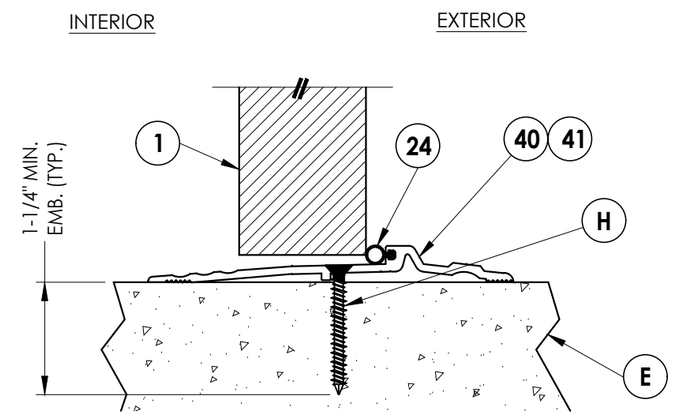

2/4 VERTICAL CROSS SECTION
Inswing configuration

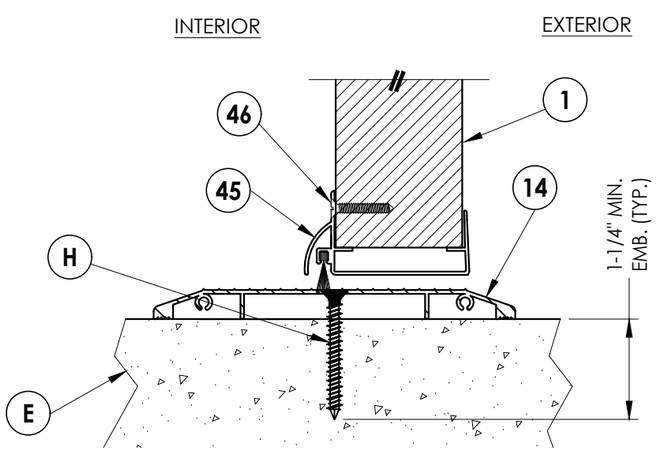

3/4 VERTICAL CROSS SECTION
Inswing configuration

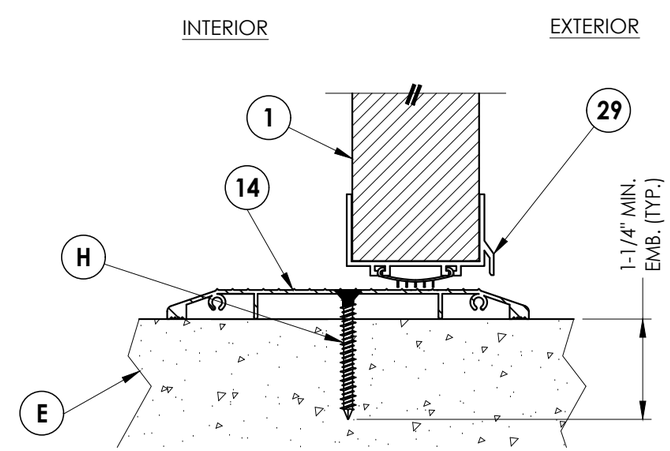

4/4 VERTICAL CROSS SECTION
Inswing configuration

Documents Prepared By:
Lyndon F. Schmidt
P.E. No. 43409

RW BUILDING CONSULTANTS, INC.
P.O. Box 230, Valrico, FL 33595
Phone No.: 813.659.9197
FBPE Registry No. 9813

PRODUCT: MMI "N" STEEL DOOR

PART OR ASSEMBLY: VERTICAL CROSS SECTIONS

NO.	DATE	REVISIONS	BY
5	7/01/26	UPDATE TO 9TH ED. (2026) FBC	LFS
4	7/11/23	UPDATE TO 8TH ED. (2023) FBC	LFS
3	7/30/20	UPDATE TO 7th ED. (2020) FBC	DAC
2	7/18/17	UPDATE TO 6TH ED. (2017) FBC	LFS
1	10/14/16	UPDATE TO 5TH ED. (2014) FBC	JK

DATE: 11/3/08
SCALE: N.T.S.
DWG. BY: AL
CHK. BY: LFS
DRAWING NO.: FL-12186.2
SHEET 4 OF 9

© 2008 R.W. Building Consultants Inc.

G:\2023 FBC Drawings 1.26.26\Metal Mfg Industries\FL-12186 R4\12186.1-8.dwg

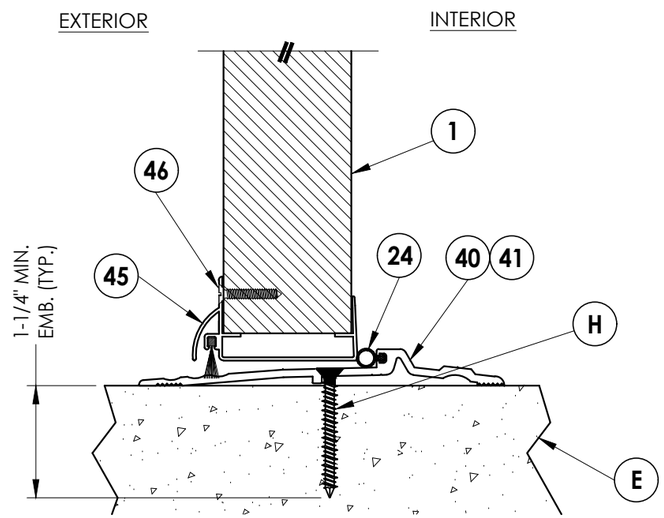

1/5 VERTICAL CROSS SECTION
Outswing shown

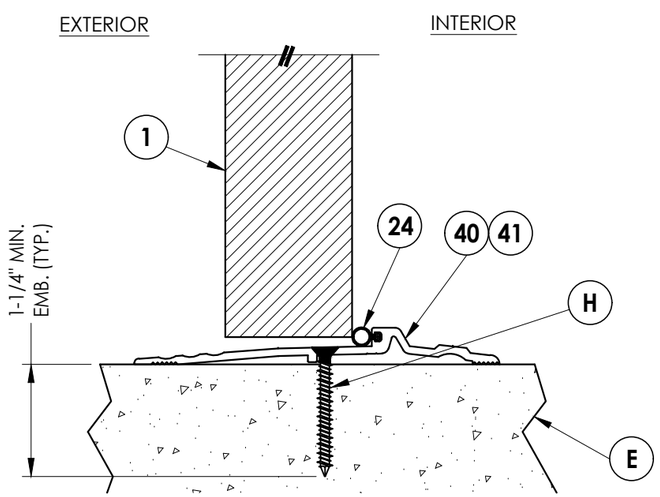

2/5 VERTICAL CROSS SECTION
Outswing shown

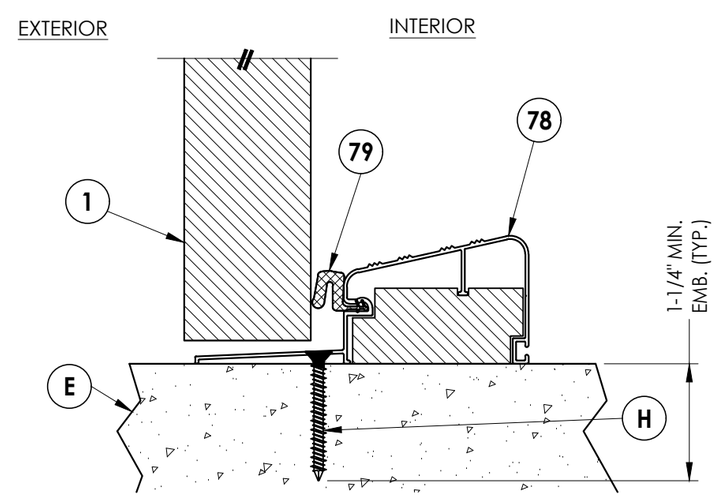

3/5 VERTICAL CROSS SECTION
Outswing shown

Documents Prepared By:
Lyndon F. Schmidt
P.E. No. 43409

RW BUILDING CONSULTANTS, INC.
P.O. Box 230, Valrico, FL 33595
Phone No.: 813.659.9197
FBPE Registry No. 9813

PRODUCT: MMI
"N" STEEL DOOR

PART OR ASSEMBLY:
VERTICAL CROSS SECTIONS

NO.	DATE	REVISIONS	BY
5	7/01/26	UPDATE TO 9TH ED. (2026) FBC	LFS
4	7/11/23	UPDATE TO 8TH ED. (2023) FBC	LFS
3	7/30/20	UPDATE TO 7th ED. (2020) FBC	DAC
2	7/18/17	UPDATE TO 6TH ED. (2017) FBC	LFS
1	10/14/16	UPDATE TO 5TH ED. (2014) FBC	JK

DATE: 11/3/08
SCALE: N.T.S.
DWG. BY: AL
CHK. BY: LFS
DRAWING NO.: FL-12186.2
SHEET 5 OF 9

© 2008 R.W. Building Consultants Inc.

G:\2023 FBC Drawings 1.26.26\Metal Mfg Industries\FL-12186 R4\12186.1-8.dwg

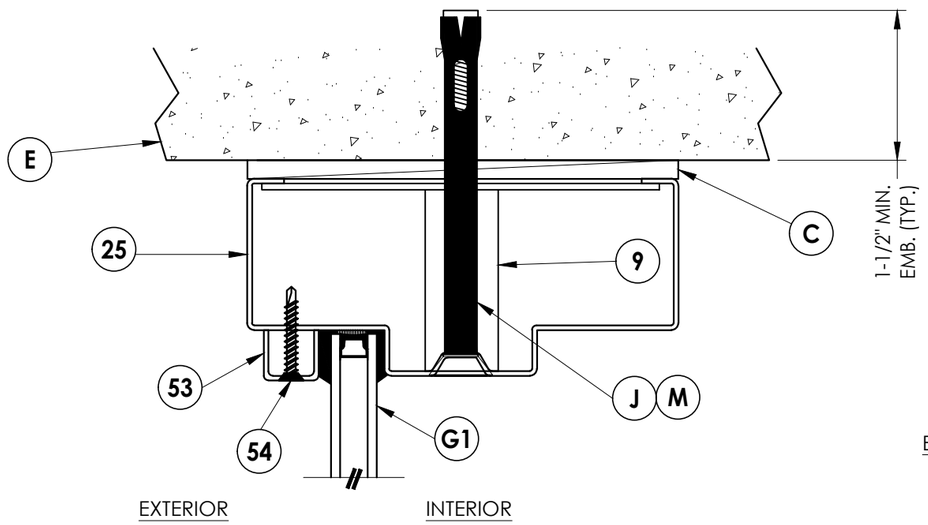

1/6 **VERTICAL CROSS SECTION**

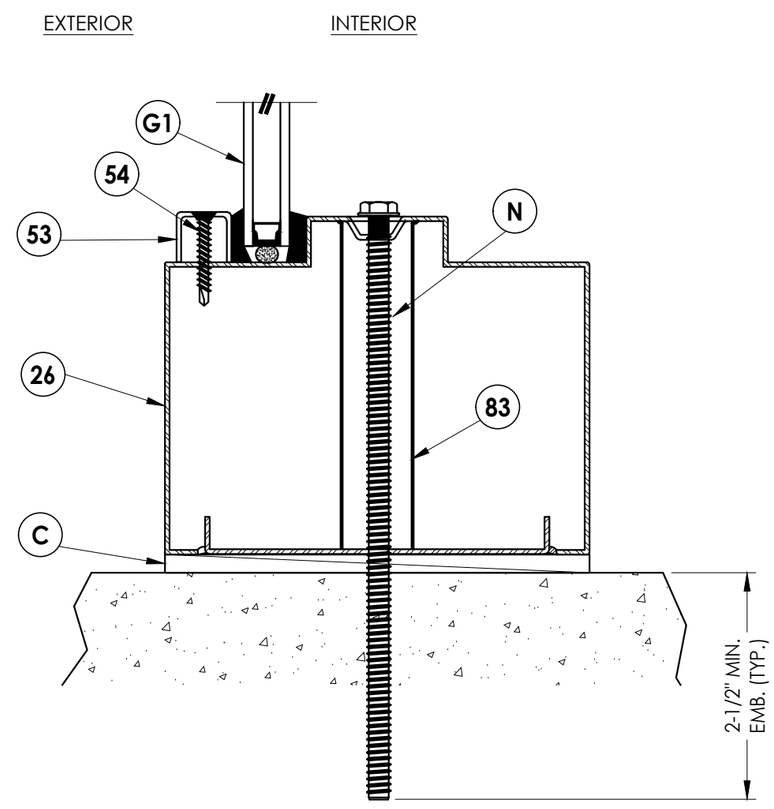

2/6 **VERTICAL CROSS SECTION**

Documents Prepared By:
Lyndon F. Schmidt
P.E. No. 43409

RW BUILDING CONSULTANTS, INC.
P.O. Box 230, Valrico, FL 33595
Phone No.: 813.659.9197
FBPE Registry No. 9813

PRODUCT: MMI "N" STEEL DOOR

PART OR ASSEMBLY: VERTICAL CROSS SECTIONS

REVISIONS

NO.	DATE		BY
5	7/01/26	UPDATE TO 9TH ED. (2026) FBC	LFS
4	7/11/23	UPDATE TO 8TH ED. (2023) FBC	LFS
3	7/30/20	UPDATE TO 7TH ED. (2020) FBC	DAC
2	7/18/17	UPDATE TO 6TH ED. (2017) FBC	LFS
1	10/14/16	UPDATE TO 5TH ED. (2014) FBC	JK

DATE: 11/3/08
SCALE: N.T.S.
DWG. BY: AL
CHK. BY: LFS
DRAWING NO.: FL-12186.2
SHEET 6 OF 9

© 2008 R.W. Building Consultants Inc.

G:\2023 FBC Drawings 1.26.26\Metal Mfg Industries\FL-12186 R4\12186.1-8.dwg

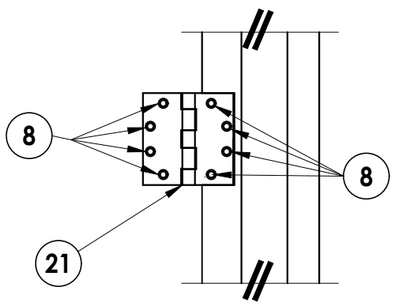

DETAIL 1

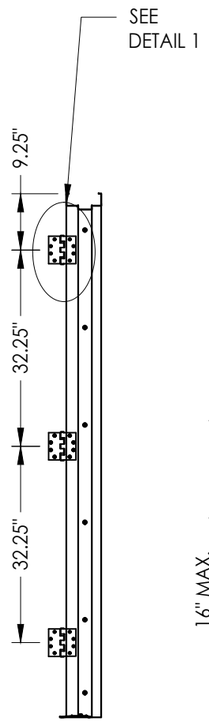

HINGE JAMB

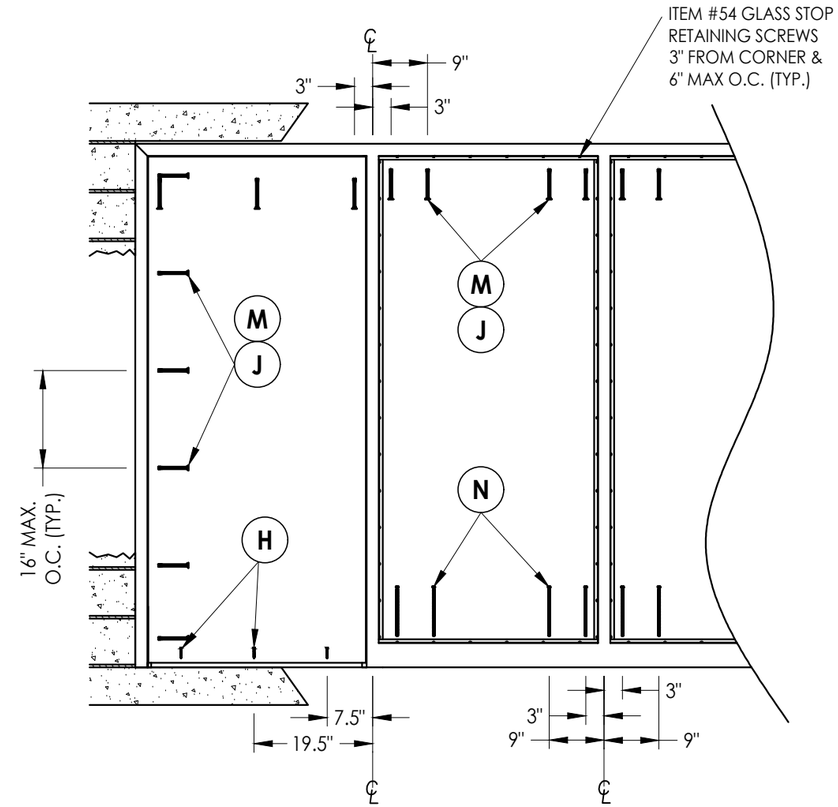

FRAME ANCHORING

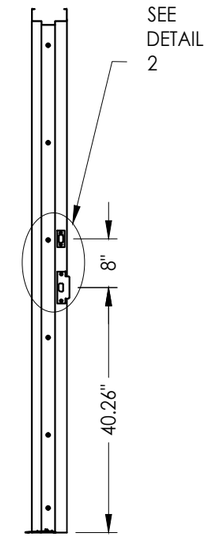

STRIKE JAMB

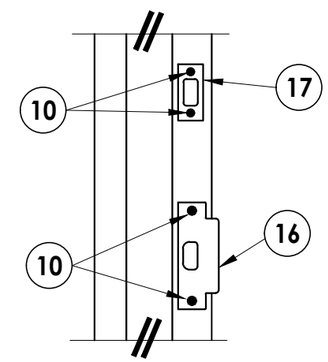

DETAIL 2

CONCRETE ANCHOR NOTES:

1. *Concrete anchor locations at the corners may be adjusted to maintain the min. edge distance to mortar joints.*
2. *Concrete anchor locations noted as "MAX. ON CENTER" must be adjusted to maintain the min. edge distance to mortar joints, additional concrete anchors may be required to ensure the "MAX. ON CENTER" dimension are not exceeded.*
3. *Concrete anchor table:*

ANCHOR TYPE	ANCHOR SIZE	MIN. EMBEDMENT	MIN. CLEARANCE TO MASONRY EDGE	MIN. CLEARANCE TO ADJACENT ANCHOR
ITW TAPCON®	1/4"	1-1/4"	2-1/2"	4"
DYNABOLT SLEEVE ANCHOR	3/8"	1-1/2"	2-1/4"	4-1/2"
TAPPER	3/8"	1-1/2"	4-1/4"	6"
SCREW-BOLT+™	1/2"	2-1/2"	6"	6"

4. *Embedment may be through 1-1/4" face shell of hollow block.*

Documents Prepared By:
Lyndon F. Schmidt
P.E. No. 43409
RW BUILDING CONSULTANTS, INC.
P.O. Box 230, Valrico, FL 33595
Phone No.: 813.659.9197
FBPE Registry No. 9813

PRODUCT: *MMI "N" STEEL DOOR*

PART OR ASSEMBLY: *ANCHORING DETAILS*

NO.	DATE	REVISIONS	BY
5	7/01/26	UPDATE TO 9TH ED. (2026) FBC	LFS
4	7/11/23	UPDATE TO 8TH ED. (2023) FBC	LFS
3	7/30/20	UPDATE TO 7TH ED. (2020) FBC	DAC
2	7/18/17	UPDATE TO 6TH ED. (2017) FBC	LFS
1	10/14/16	UPDATE TO 5TH ED. (2014) FBC	JK

DATE: 11/3/08
SCALE: N.T.S.
DWG. BY: AL
CHK. BY: LFS
DRAWING NO.: FL-12186.2
SHEET 7 OF 9

© 2008 R.W. Building Consultants Inc.

G:\2023 FBC Drawings 1.26.26\Metal Mfg Industries\FL-12186 R4\12186.1-8.dwg

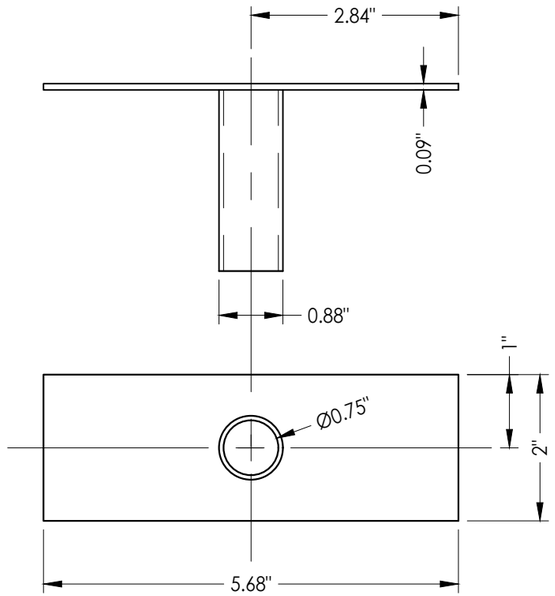

9 TUBE ANCHOR

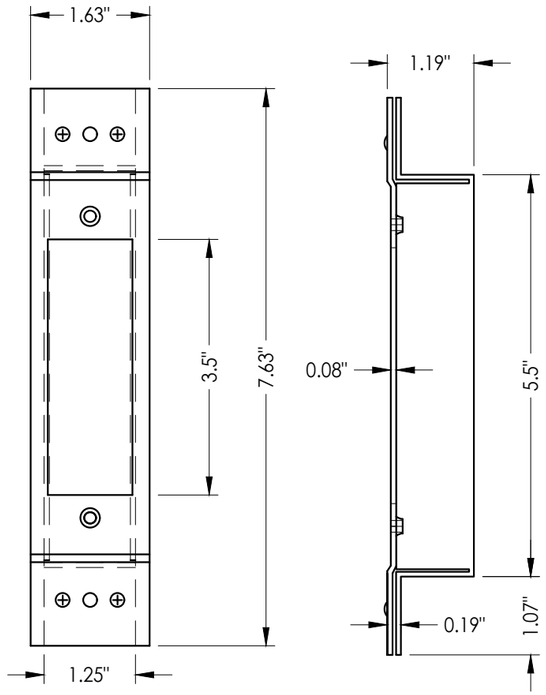

27 LATCH STRIKE REINFORCEMENT

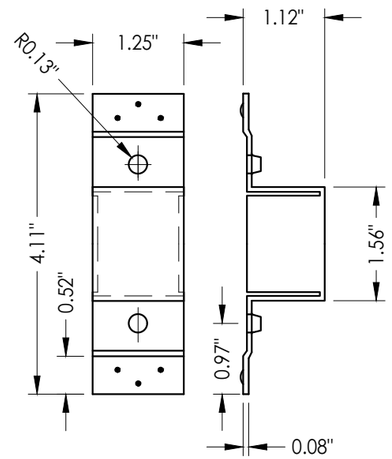

19 DEADBOLT STRIKE REINFORCEMENT

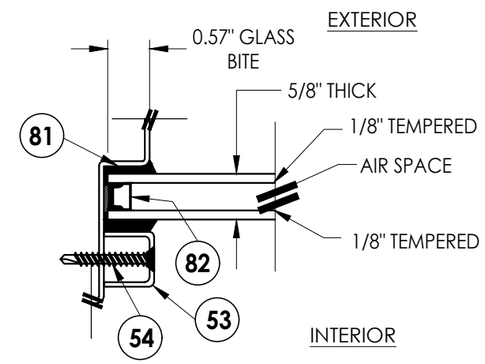

G1 GLAZING DETAIL

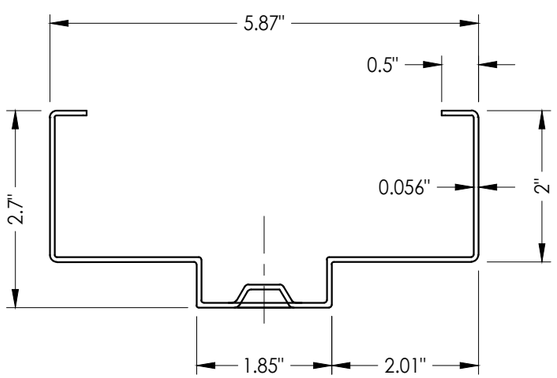

25 HOLLOW METAL FRAME

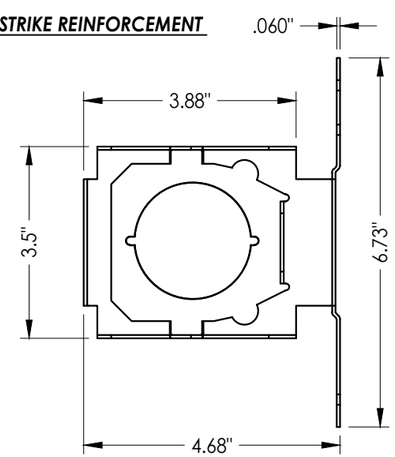

5 LOCK BOX REINFORCEMENT

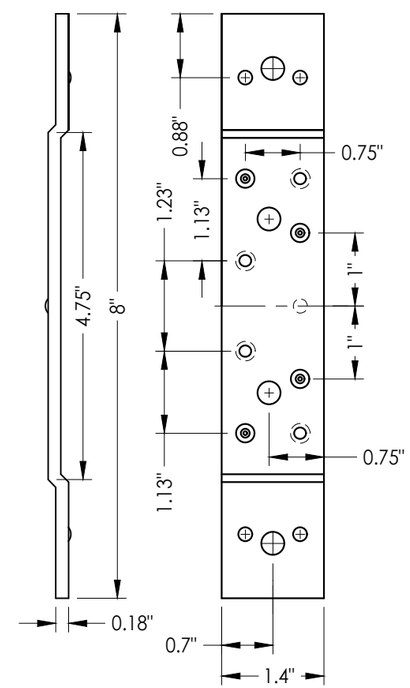

23 STANDARD (SHORT) DOOR HINGE
Reinforcement middle and bottom hinge

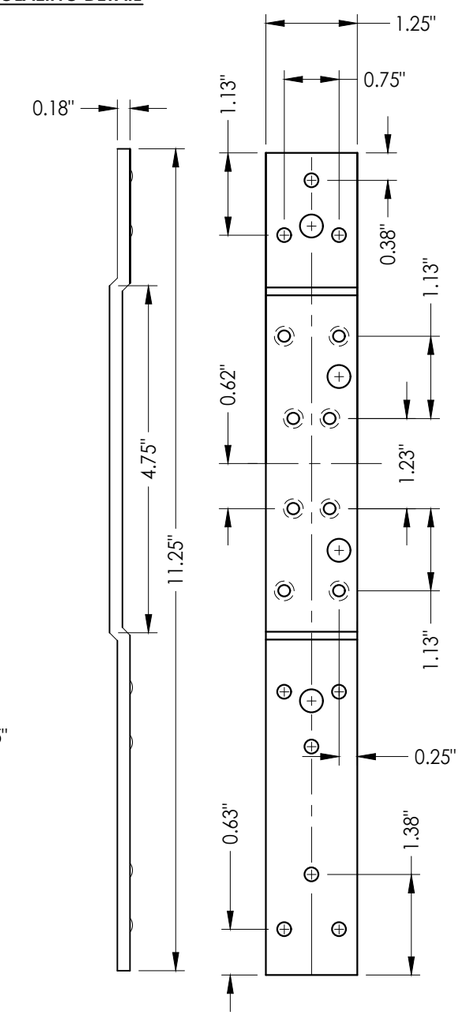

22 STANDARD (LONG) DOOR HINGE
Reinforcement top hinge

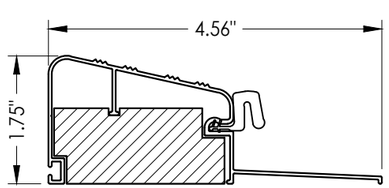

78 OUTSWING THRESHOLD

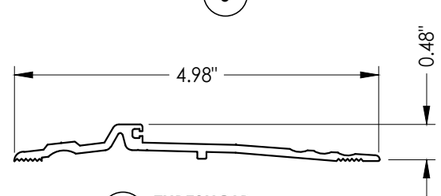

40 THRESHOLD

Documents Prepared By:
Lyndon F. Schmidt
P.E. No. 43409

RW BUILDING CONSULTANTS, INC.
P.O. Box 230, Valrico, FL 33595
Phone No.: 813.659.9197
FBPE Registry No. 9813

PRODUCT: MMI "N" STEEL DOOR

PART OR ASSEMBLY: GLAZING DETAIL & COMPONENTS

REVISIONS

NO.	DATE		BY
5	7/01/26	UPDATE TO 9TH ED. (2026) FBC	LFS
4	7/11/23	UPDATE TO 8TH ED. (2023) FBC	LFS
3	7/30/20	UPDATE TO 7th ED. (2020) FBC	DAC
2	7/18/17	UPDATE TO 6TH ED. (2017) FBC	LFS
1	10/14/16	UPDATE TO 5TH ED. (2014) FBC	JK

DATE: 11/3/08
SCALE: N.T.S.
DWG. BY: AL
CHK. BY: LFS
DRAWING NO.: FL-12186.2
SHEET 8 OF 9

© 2008 R.W. Building Consultants Inc.

G:\2023 FBC Drawings 1.26.26\Metal Mfg Industries\FL-12186 R4\12186.1-8.dwg

BILL OF MATERIALS

ITEM	DESCRIPTION	MATERIAL
C	MAX. 1/4" SHIM SPACE	-
E	MASONRY - 3,000 PSI MIN. CONCRETE CONFORMING TO ACI 301 OR HOLLOW BLOCK CONFORMING TO ASTM C90	CONCRETE
H	1/4" x 1-3/4" ITW PFH CONCRETE SCREW	STEEL
J	3/8" X 5" PFH ITW DYNABOLT SLEEVE ANCHOR	STEEL
M	3/8" X 5" TAPPER CONCRETE SCREW BY POWERS FASTENERS	STEEL
N	1/2" X 8" HH SCREW-BOLT+ CONC. ANCHOR (DeWALT/POWERS)	STEEL
1	"N" OPAQUE STEEL DOOR PANEL	-
2	DOOR SKIN (0.042" THK. STEEL, Fy = 40,300 PSI MIN.)	STEEL
3	FOAM 1.0 PCF MIN. DENSITY	POLYSTYRENE
4	DOOR TOP & BOTTOM CLOSER	STEEL
5	LOCK BOX REINFORCEMENT	STEEL
6	CLOSER REINFORCEMENT	STEEL
8	#12-24 x 1/2" SELF TAPPER	STEEL
9	TUBE ANCHOR	STEEL
10	#12-24 x 1.0" COMBINATION MACHINE / WOOD SCREW	STEEL
12	MULLION Z BRACKET	STEEL
14	COLUMBIA ADA THRESHOLD #6510	ALUMINUM
15	MULLION MIN. (0.056" THK) BY MMI	STEEL
16	ANSI LATCH STRIKE	STEEL
17	DEADBOLT STRIKE	STEEL
19	DEADBOLT STRIKE REINFORCEMENT	STEEL
20	WEATHER-STRIP	NEOPRENE
21	4-1/2" X 4-1/2" X 0.125" TEMPLATE HINGE	STEEL
22	STANDARD (LONG) DOOR HINGE TOP HINGE REINFORCEMENT	STEEL
23	STANDARD (SHORT) DOOR HINGE MIDDLE BOTTOM REINFORCEMENT	STEEL
24	WEATHER STRIP (THRESHOLD)	NEOPRENE
25	FRAME 5-3/4" X 2" MIN. (0.056" THK) BY MMI	STEEL
26	FRAME SILL 5-3/4" X 4" MIN. (0.056" THK) BY MMI	STEEL
27	LATCH STRIKE REINFORCEMENT	STEEL
28	FRAME HINGE REINFORCEMENT	STEEL
29	COLUMBIA DOOR BOTTOM SWEEP #2580	ALUMINUM
40	THRESHOLD NATIONAL GUARD PRODUCTS, INC. #896	ALUMINUM
41	THRESHOLD NATIONAL GUARD PRODUCTS, INC. #950	ALUMINUM
45	95WHA DOOR SWEEP NATIONAL GUARD PRODUCTS, INC.	ALUMINUM
46	#6 X 3/4" PHILIPS HEAD SMS	STEEL
53	U-CHANNEL GLASS STOP	STEEL
54	#8 X 1.25" PFH SMS	STEEL
70	SCHLAGE LOCK SET ASSEMBLY ND53PD	STEEL
71	DESIGN HARDWARE D1-S SERIES DEADBOLT	STEEL
72	DESIGN HARDWARE "Z" SERIES ENTRY	STEEL
76	DESIGN HARDWARE D2-S SERIES DEADBOLT	STEEL
77	DESIGN HARDWARE "X" SERIES ENTRY	STEEL
78	OUTSWING THRESHOLD QOSH BY DLP	ALUM/WOOD
79	WEATHER-STRIP	FOAM
81	DOW 995 STRUCTURAL SILICONE	SILICONE
82	GLASS SPACER	ALUMINUM
83	SILL TUBE ANCHOR	STEEL

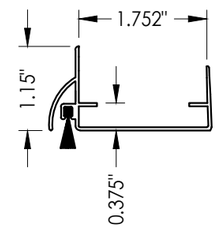

45 DOOR SWEEP

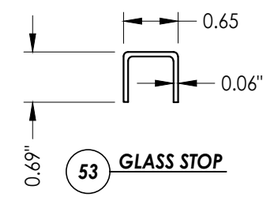

53 GLASS STOP

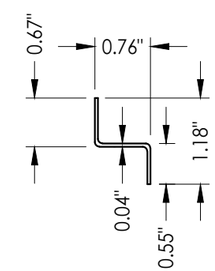

12 MULLION Z BRACKET

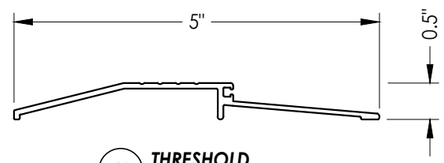

41 THRESHOLD

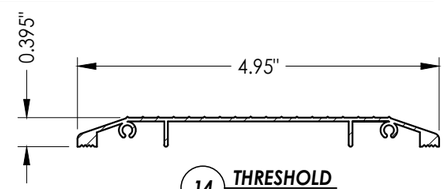

14 THRESHOLD

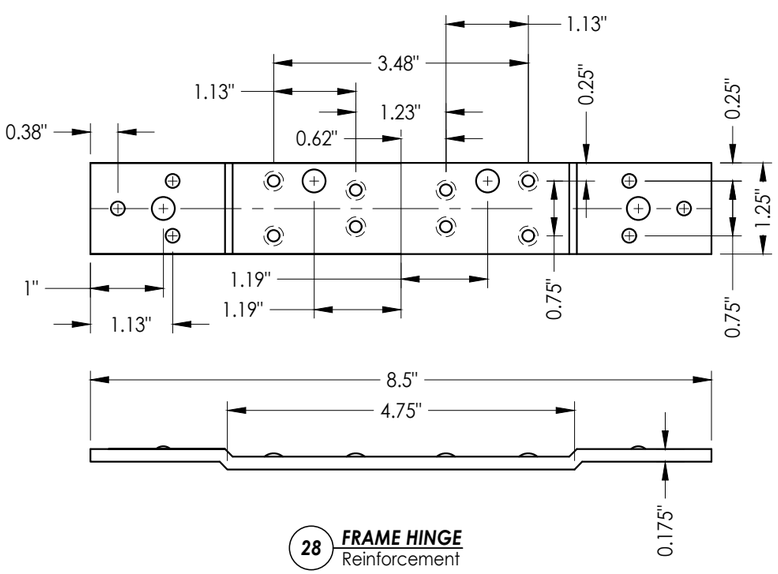

28 FRAME HINGE Reinforcement

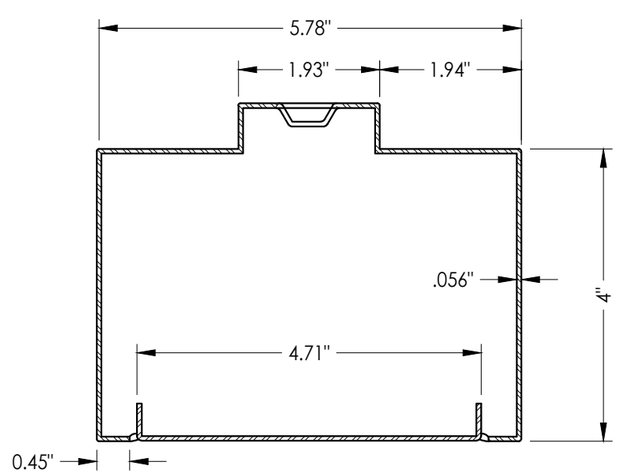

26 HOLLOW METAL FRAME SILL

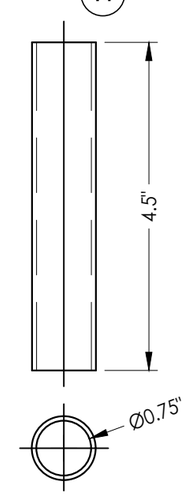

83 SILL TUBE ANCHOR

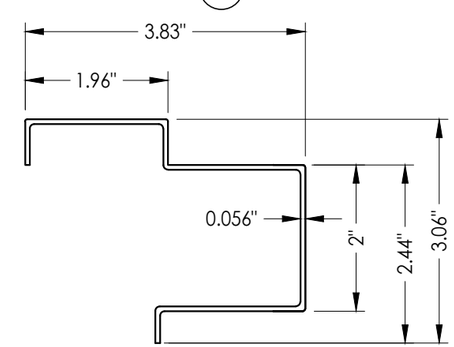

15 MULLION

Documents Prepared By:
Lyndon F. Schmidt
P.E. No. 43409

RW BUILDING CONSULTANTS, INC.
P.O. Box 230, Valrico, FL 33595
Phone No.: 813.659.9197
FBPE Registry No. 9813

PRODUCT: MMI "N" STEEL DOOR

PART OR ASSEMBLY: BILL OF MATERIALS & COMPONENTS

NO.	DATE	REVISIONS	BY
5	7/01/26	UPDATE TO 9TH ED. (2026) FBC	LFS
4	7/11/23	UPDATE TO 8TH ED. (2023) FBC	LFS
3	7/30/20	UPDATE TO 7th ED. (2020) FBC	DAC
2	7/18/17	UPDATE TO 6TH ED. (2017) FBC	LFS
1	10/14/16	UPDATE TO 5TH ED. (2014) FBC	JK

DATE: 11/3/08
SCALE: N.T.S.
DWG. BY: AL
CHK. BY: LFS
DRAWING NO.: FL-12186.2
SHEET 9 OF 9

© 2008 R.W. Building Consultants Inc.

G:\2023 FBC Drawings 1.26.26\Metal Mfg Industries\FL-12186 R4\12186.1-8.dwg